Swirl Flaps

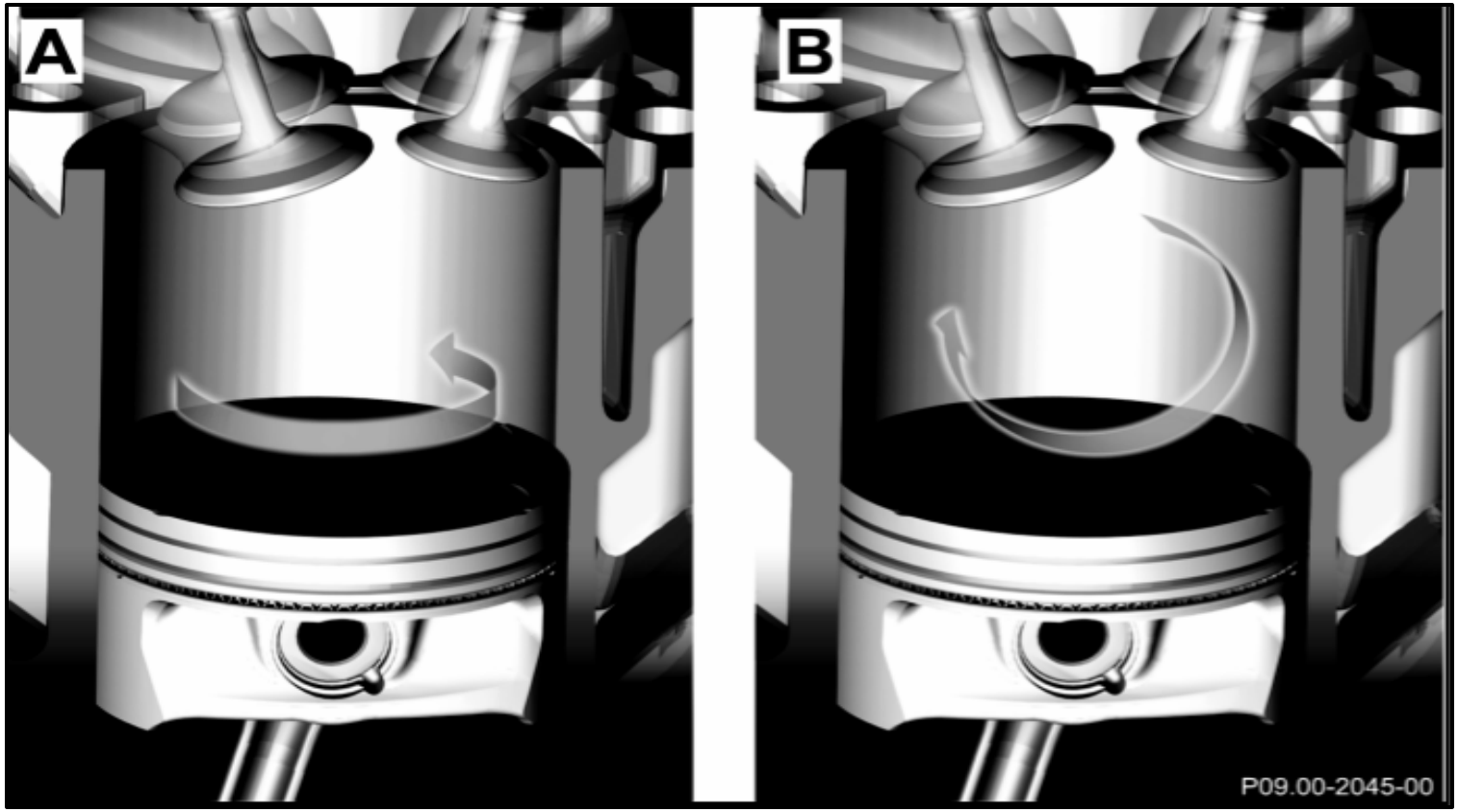

A = Non swirl not active

B = Swirl active

Swirl Flaps

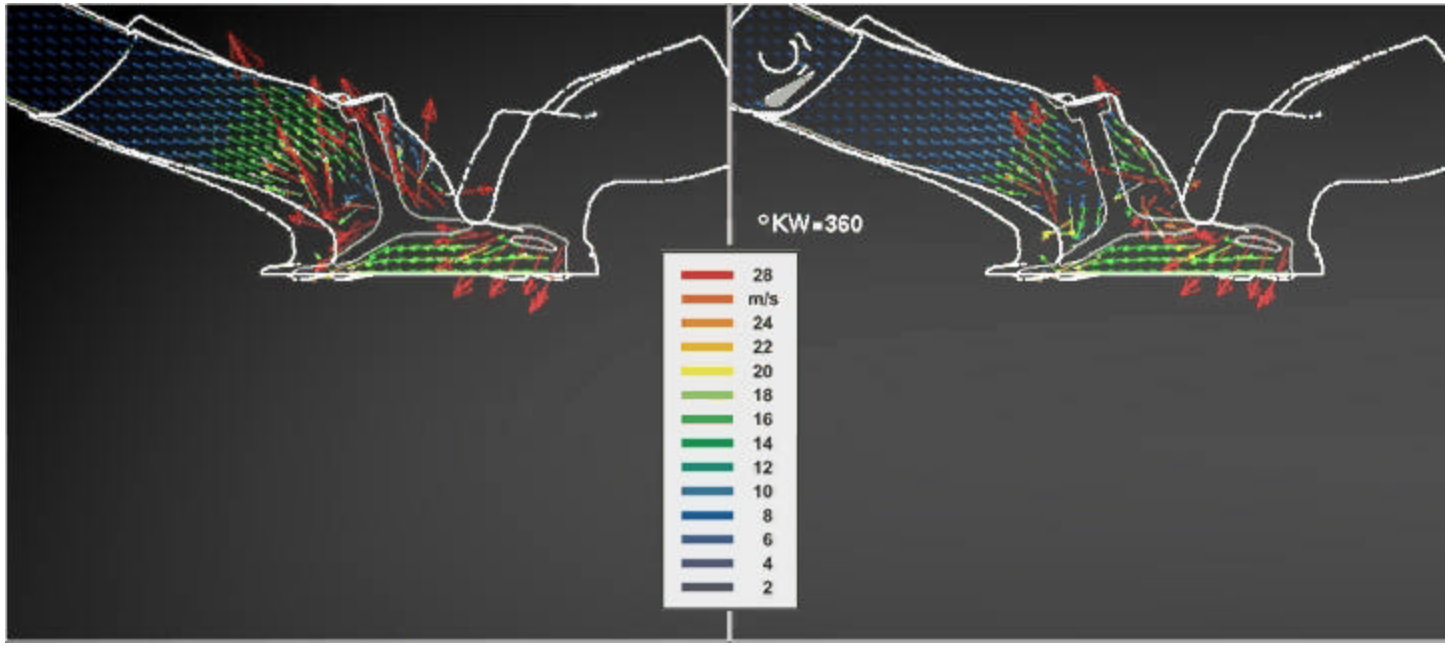

Swirl Flap Operating Parameters

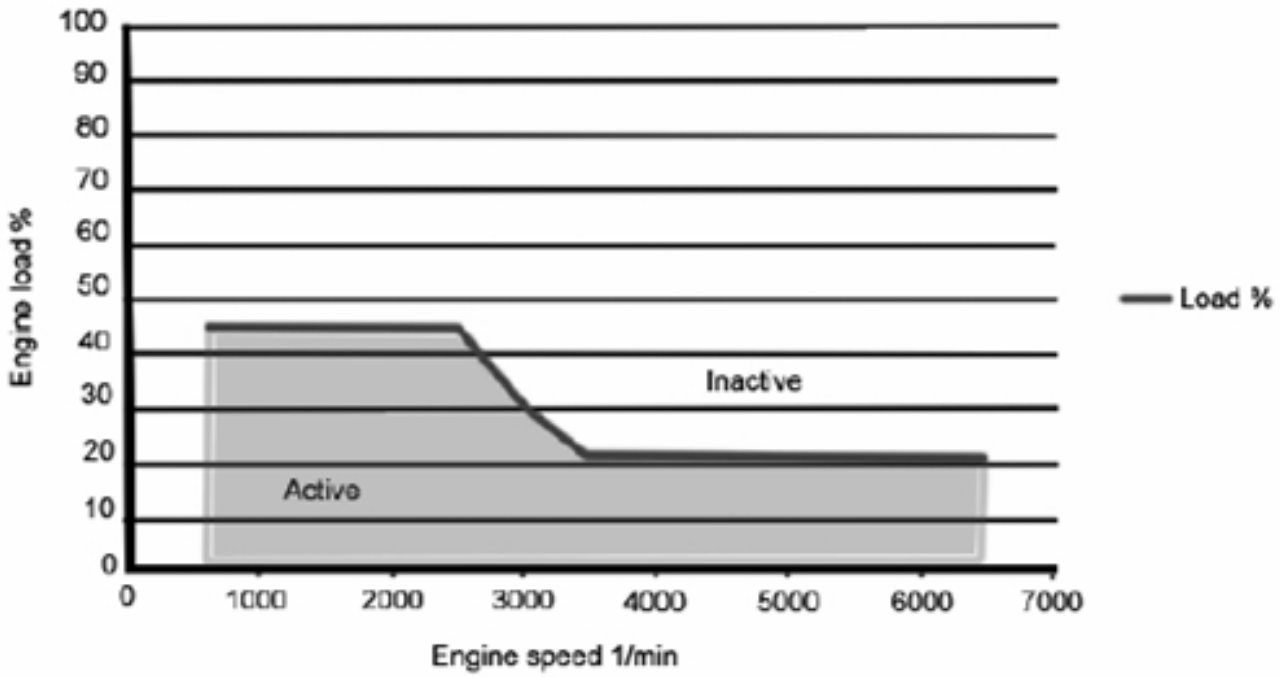

Swirl Flap Functional Diagram

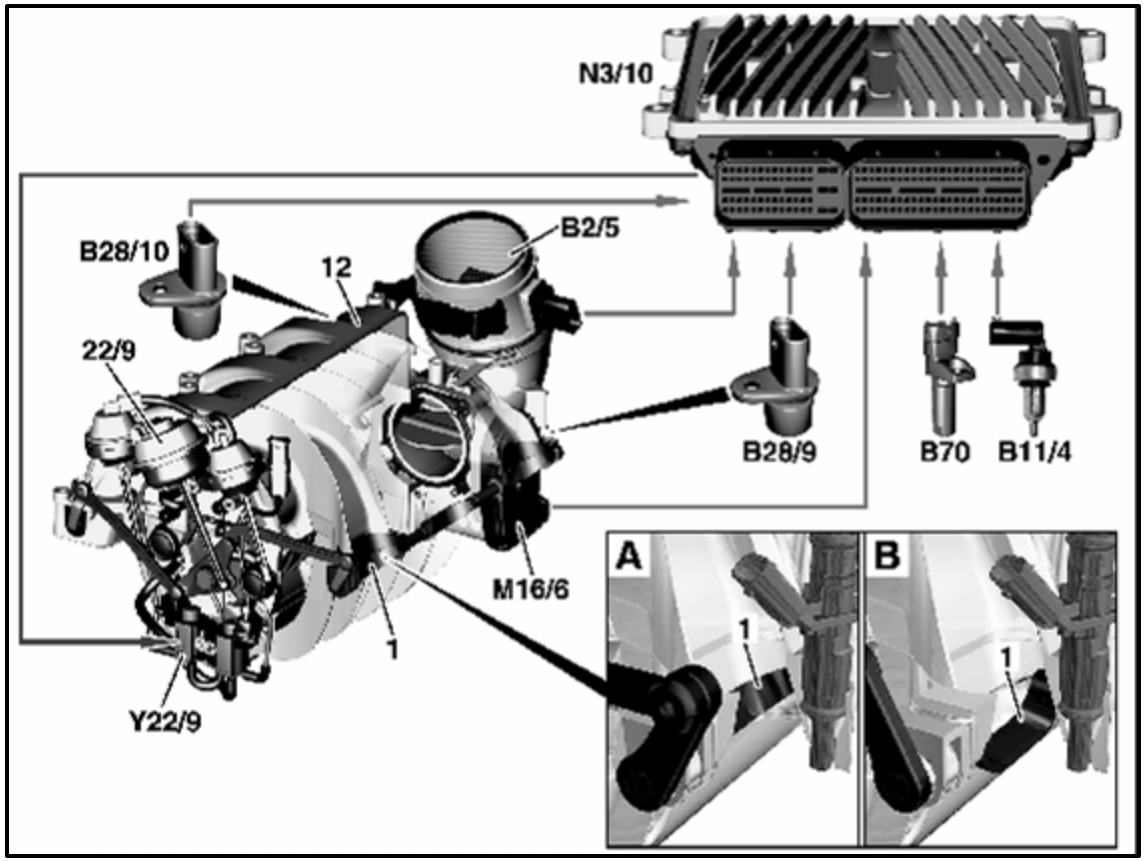

12 – Intake manifold
1 – Swirl flap
22/9 – Aneroid capsule swirl flap Switchover
B11/4 – Coolant temperature sensor
B70- Crankshaft hall sensor
B28/9 – Left intake manifold swirl flap position sensor
B28/10 – Right intake manifold swirl flap position sensor
B2/5 – Hot film mass airflow sensor
M16/6 – Throttle valve actuator
N3/10 – ME 9.7
Y22/9 – Intake manifold swirl flap switchover valve
A – Swirl flap recessed (no swirl)
B – Swirl flap outward (swirl)

ME 9.7

Inputs

Outputs

ME 9.7

Control Module function:

- Cylinder sequential injection
- Single spark plug coil
  (control and diagnostics)
- Electronic throttle plate positioning
- LIN communication with alternator
- Turbulence flap regulation
- Variable length intake runner control
- After run process

N3/10 – ME 9.7

Note: When erasing DTC's you must wait for the after run function to finish otherwise faults may remain.

ME After Run Process

- ME performs an after run process when circuit 15 is switched off
- After run is determined by ME and required to store inputs
- After run time is typically 5 seconds but can take several minutes longer depending on various functions (temperature management, OBD, DAS3 etc.)
  - at 176°F approx. 4 seconds, at 68°F approx. 60 seconds and at -22°F approx. 150 seconds
  - After cycling key off, must wait ~ 150 seconds
- This is the period in which the fault memory is over-written

ME 9.7 Inputs/Outputs

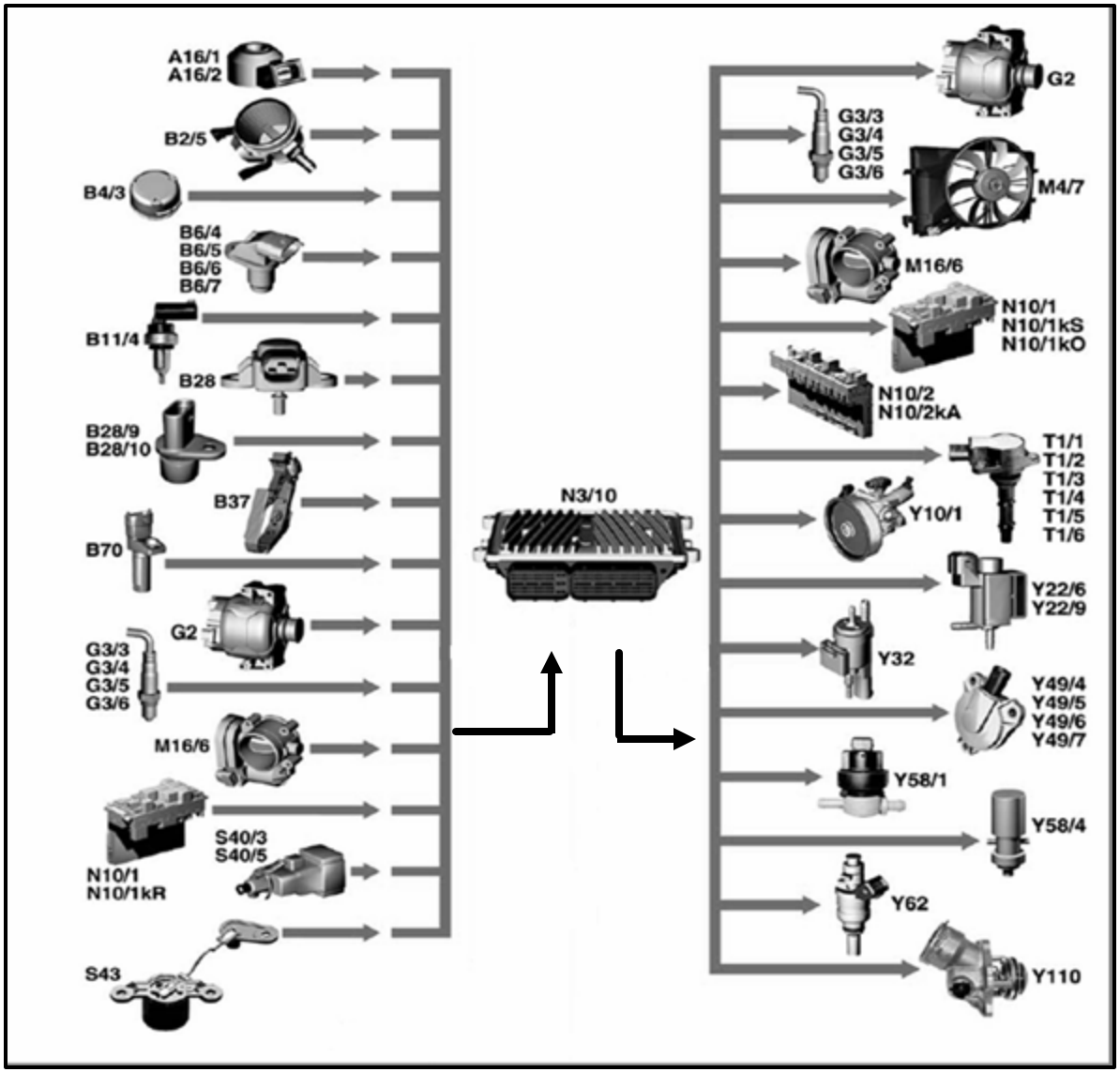

Inputs

Outputs

ME 9.7 Inputs/Outputs Legend

- A16/1 – Right knock sensor
- A16/2 – Left knock sensor
- B2/5 – Hot film mass air flow sensor
- B4/3 – Fuel tank pressure sensor
- B6/4 – Left intake camshaft hall sensor
- B6/5 – Right intake camshaft hall sensor
- B6/6 – Left exhaust camshaft hall sensor
- B6/7 – Right exhaust camshaft hall sensor
- B11/4 – Coolant temperature sensor
- B28 – Intake manifold pressure sensor
- B28/9 – Left intake manifold swirl flap position sensor
- B28/10 – Right intake manifold swirl flap position sensor
- B37 – Accelerator pedal sensor
- B70 – Crankshaft hall sensor
- G2 – Alternator
- G3/3 – Left O2 sensor upstream of TWC
- G3/4 – Right O2 sensor upstream of TWC
- G3/5 – Left O2 sensor in TWC
- G3/6 – Right O2 sensor in TWC
- M16/6 – Throttle valve actuator
- N10/1 – Driver SAM
- N10/1kR – Circuit 87 relay
- N10/1kS – Starter relay
- N10/1kO – Air pump relay
- N10/2 – Rear SAM
- N10/2kA – Fuel pump relay
- S40/3 – Clutch pedal switch
- S40/5 – Start enable clutch pedal switch
- S43 – Oil level check switch
- M4/7 – Suction fan
- T1/1-6 – Ignition coils 1 to 6
- Y10/1 – Power steering pump pressure regulator valve
- Y22/6 – Variable intake manifold switchover valve
- Y22/9 – Intake manifold swirl flap switchover valve
- Y32 – Air pump switchover valve
- Y49/4 – Left camshaft intake solenoid
- Y49/5 – Right camshaft intake solenoid
- Y49/6 – Left camshaft exhaust solenoid
- Y49/7 – Right camshaft exhaust solenoid

ME 9.7 Network Signals

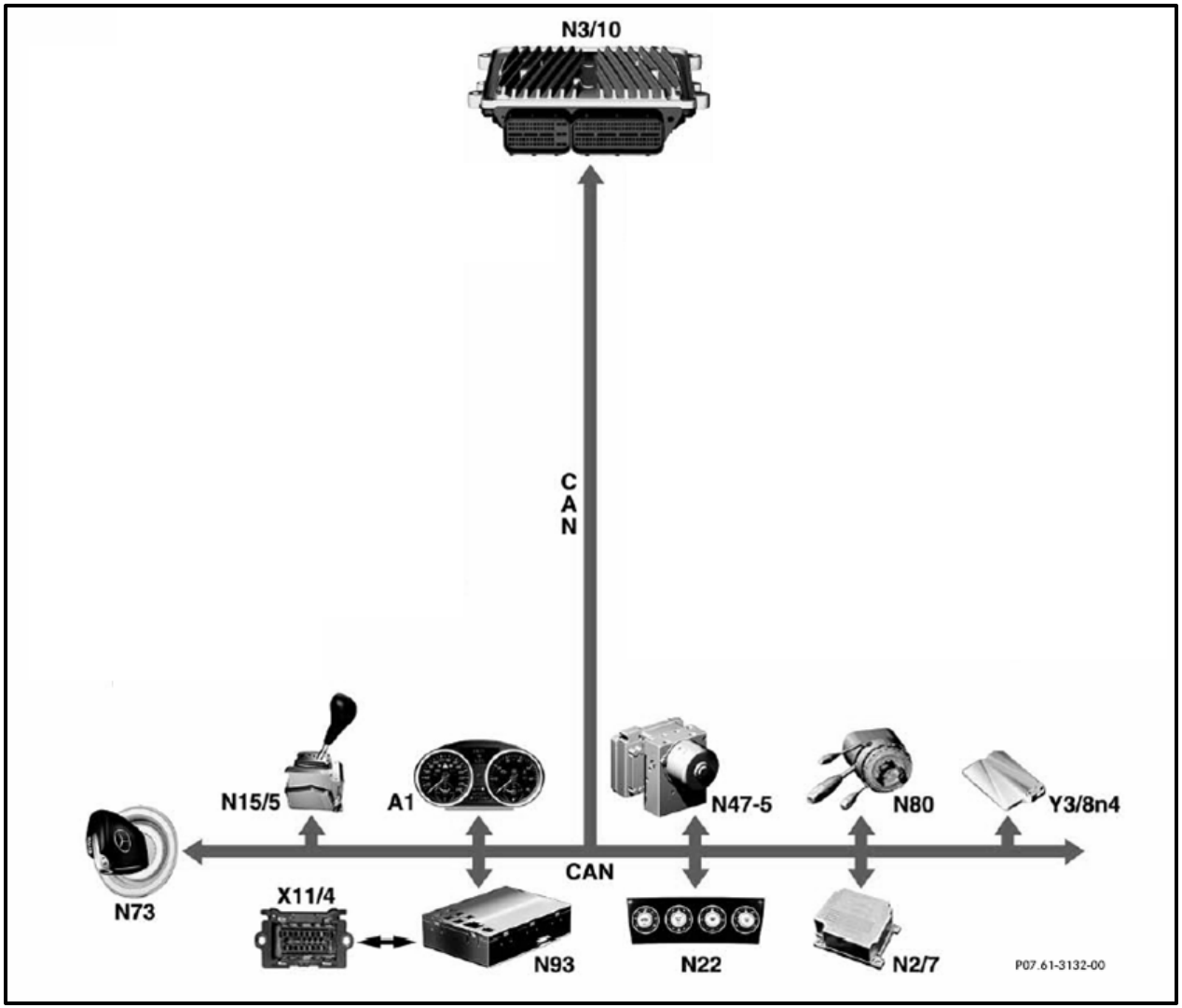

N73 – EIS
N15/5 – Electronic selector lever module control unit
A1 – Instrument Cluster
N47-5 – ESP and BAS control unit
N80 – Steering column module
Y3/8n4 – Fully integrated transmission control unit
X11/4 – Diagnostic connector
N93 – Central gateway control unit
N22 – AAC control and operating unit
N2/7 - Restraint systems control unit

ME 9.7 Network Signals

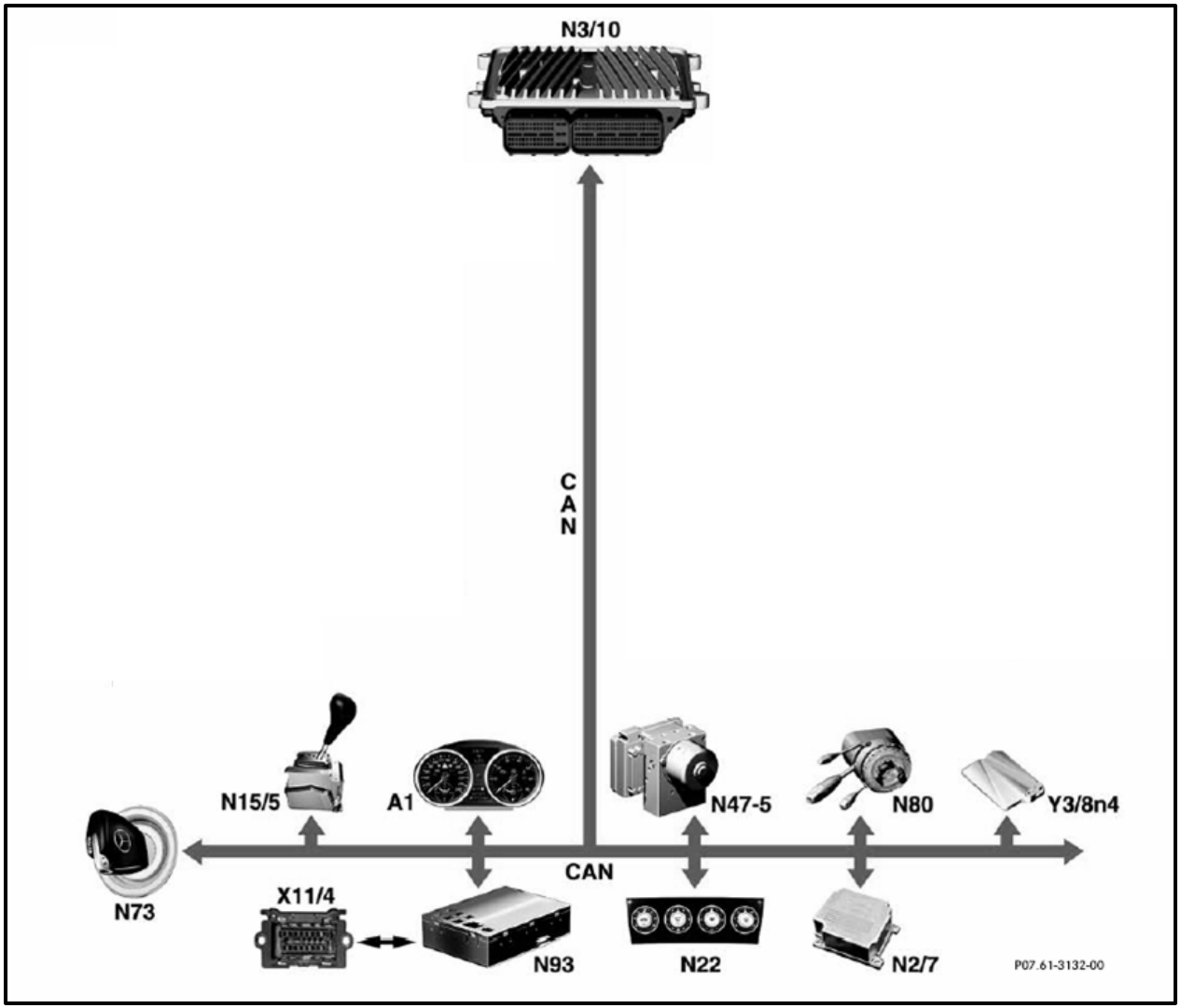

Crank sensor (Hall)

O2 sensors

Three way catalytic converters

Ignition coil

Mass airflow

Crank Sensor

- Hall effect sensor (not inductive)
- Output signal switches between ground and 5 volts
- Incremental ring gear 58 teeth (60–2) is carry over

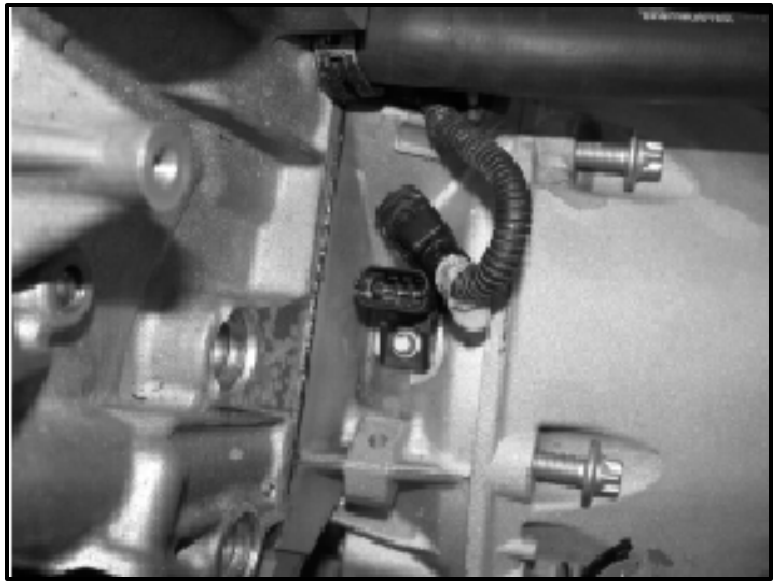

Sensor Signals

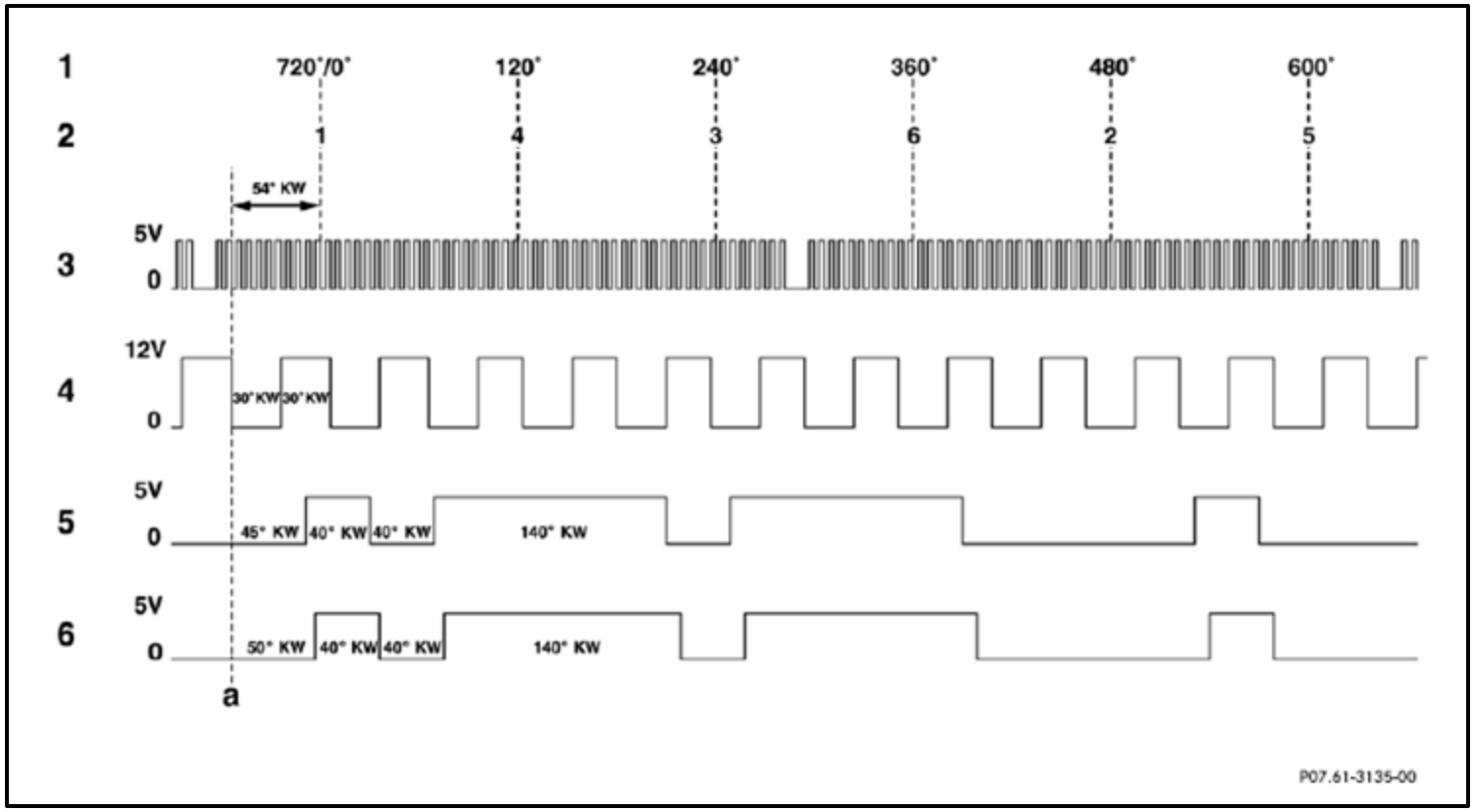

1 - Crank angle (CKA)
2 - Ignition TDC cylinder (in firing order)
3 - Signal of crankshaft Hall sensor (B70)
4 - Rpm signal TNA
5 - Camshaft Hall sensor intake signal, left and right
6 - Camshaft hall sensor exhaust signal, left and right

A = Recognition of ignition TDC of cylinder 1
- second negative signal edge of crankshaft hall sensor after the gap
- Signals 5 and 6 are "LOW"
- Rpm signal (4) changes from "HIGH“ to "LOW"

O2 Sensors

- Upstream wide-band O2 sensors as known from the M271 and OM648
- Downstream planar type O2 sensors mounted in catalytic converter housing
- Three Way Catalytic Converters (TWC)

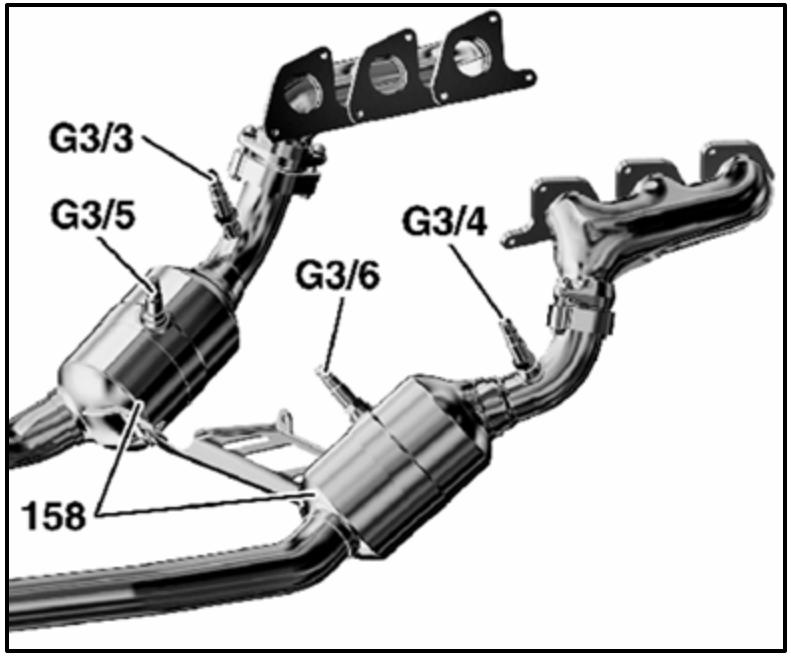

G3/3 – Left upstream O2 sensor
G3/5 – Left downstream O2 sensor
158 – Catalytic converter
G3/4 – Right upstream O2 sensor
G3/6 – Right downstream O2 sensor

Three Way Catalytic Converters

- Two ceramic monoliths with 600 cells each
- Reduces Hydrocarbons (HC)
- Reduces Carbon Monoxide (CO)
- Reduces Nitrogen Oxides (NOX)
- Downstream O2 sensor mounted between the monoliths

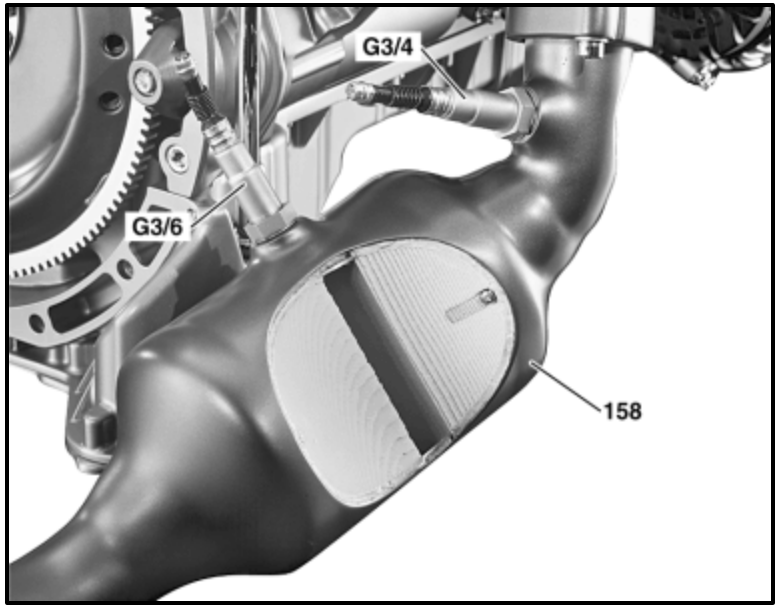

O2 Sensor Networking

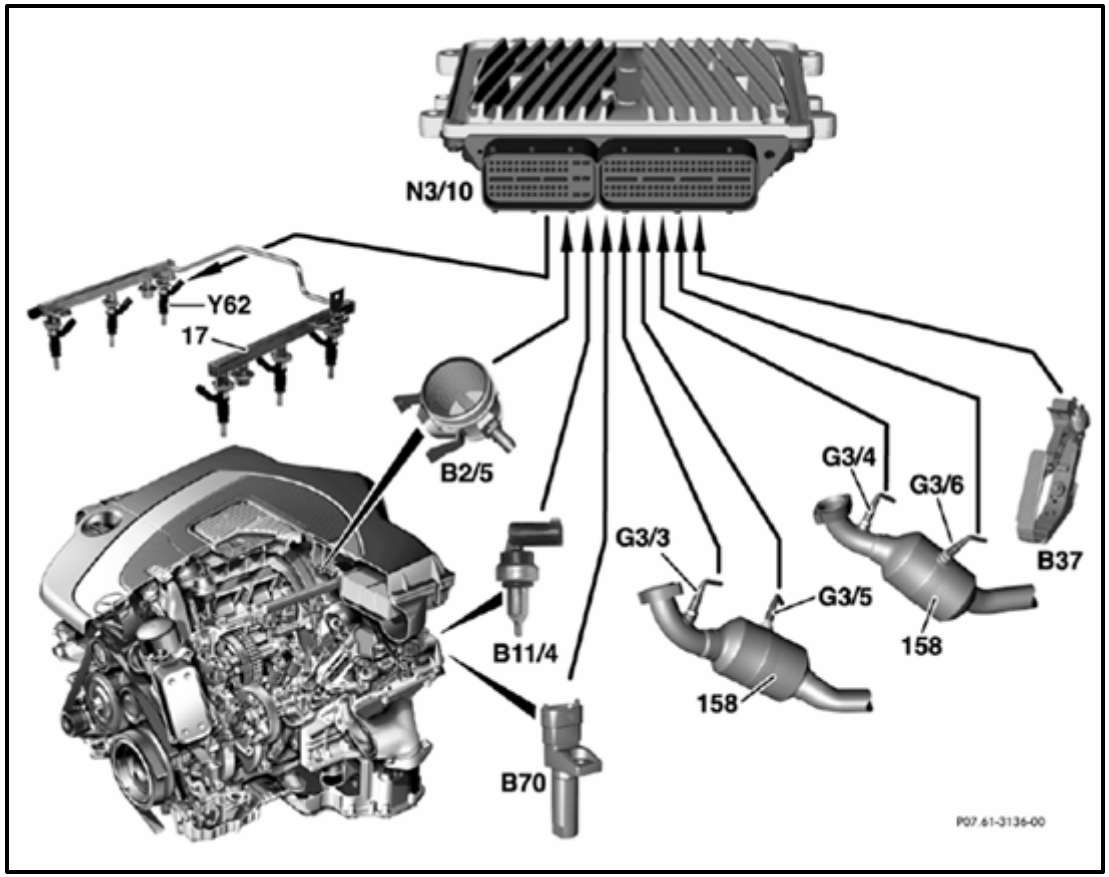

17 – Fuel rail
158 – Catalytic converter
B2/5 – Hot film mass airflow sensor
B11/4 – Coolant temperature sensor
B70 – Crankshaft hall sensor
B37 – Accelerator pedal sensor
G3/3 – Left upstream O2 sensor
G3/5 – Left downstream O2 sensor
G3/4 – Right upstream O2 sensor
G3/6 – Right downstream O2 sensor
N3/10 – ME 9.7
Y62 – Fuel injectors

Ignition Coil

- Individual coil on plug
- Driver located inside coil not in ME 9.7
- Each coil controlled separately
- Diagnostic information sent back to ME
- Bi-directional communication with ME

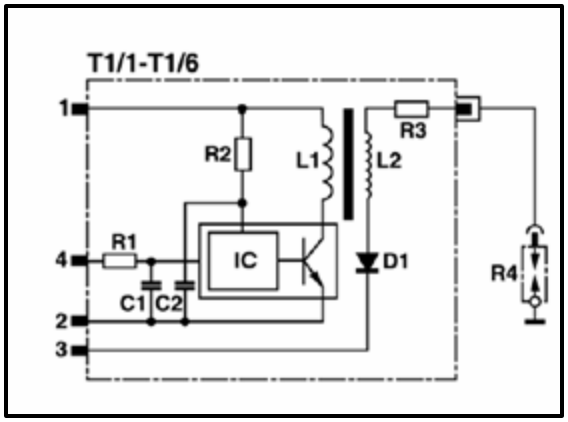

Pin 1 – batt
Pin 2 – ground
Pin 3 – ground
Pin 4 – control/diagnosis

Ignition Networking

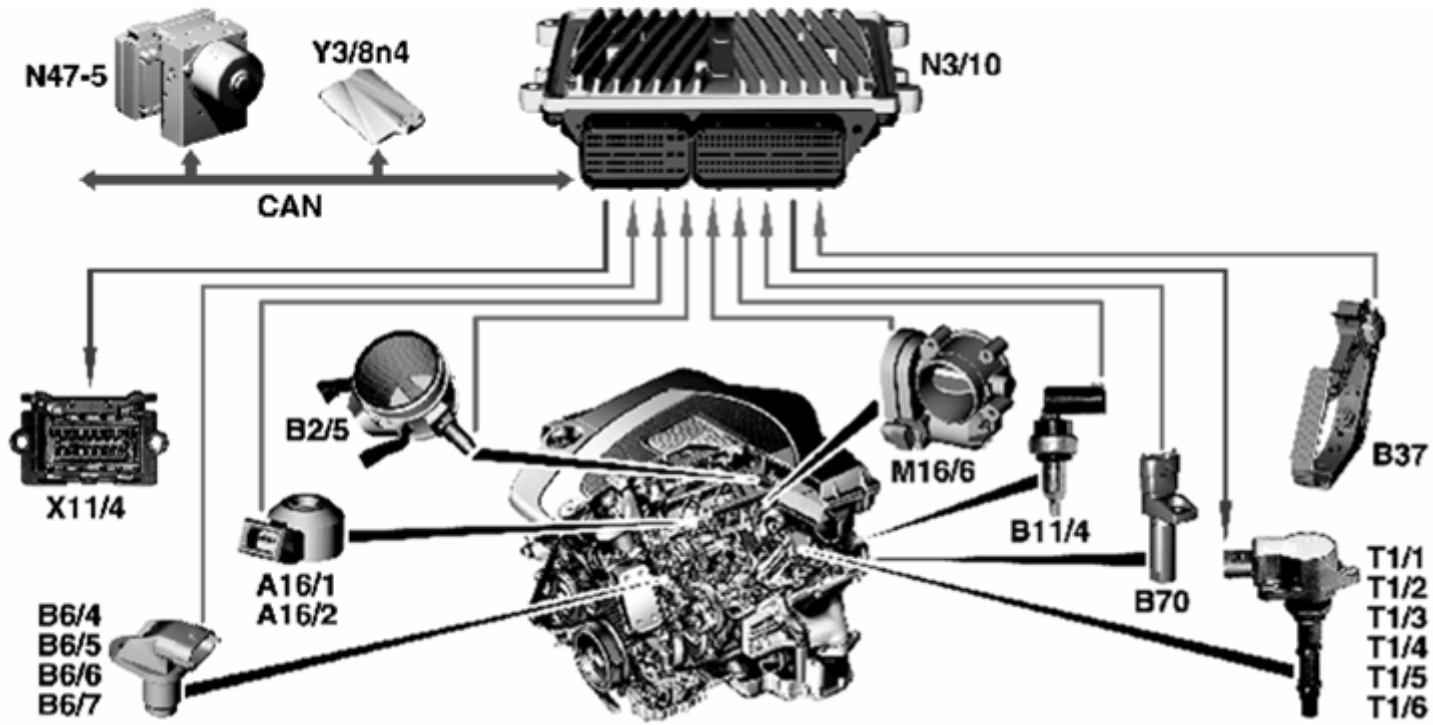

A16/1 – Right knock sensor
A16/2 – Left knock sensor
B6/4 – Left intake camshaft hall sensor
B6/5 – Right intake camshaft hall sensor
B6/6 – Left exhaust camshaft hall sensor
B6/7 – Right exhaust camshaft hall sensor
B2/5 – Hot film mass airflow sensor
B11/4 – Coolant temperature sensor
B70 – Crankshaft hall sensor
B37 – Accelerator pedal sensor
M16/6 – Throttle valve actuator
N3/10 – ME 9.7
N47-5 – ESP and BAS control unit
T1/1 through T1/6 – ignition coil for cylinders 1 to 6
Y3/8n4 - Fully integrated transmission control (VGS) control unit
X11/4 – Data link connector

Hot Film Mass Airflow Sensor

- Frequency signal from Mass Airflow to ME

- Integrated Intake air temperature sensor used

Temperature management

Thermostat

Control

Temperature Management

- Coolant Temperature is regulated via Me 9.7
- 3 plate thermostat
- Regulates temperature from 185°F to 221°F (85°C to 105°C)
- Heating element in thermostat energized to heat thermostat
- 4 operating modes dependent on engine temperature and load

Temperature Management

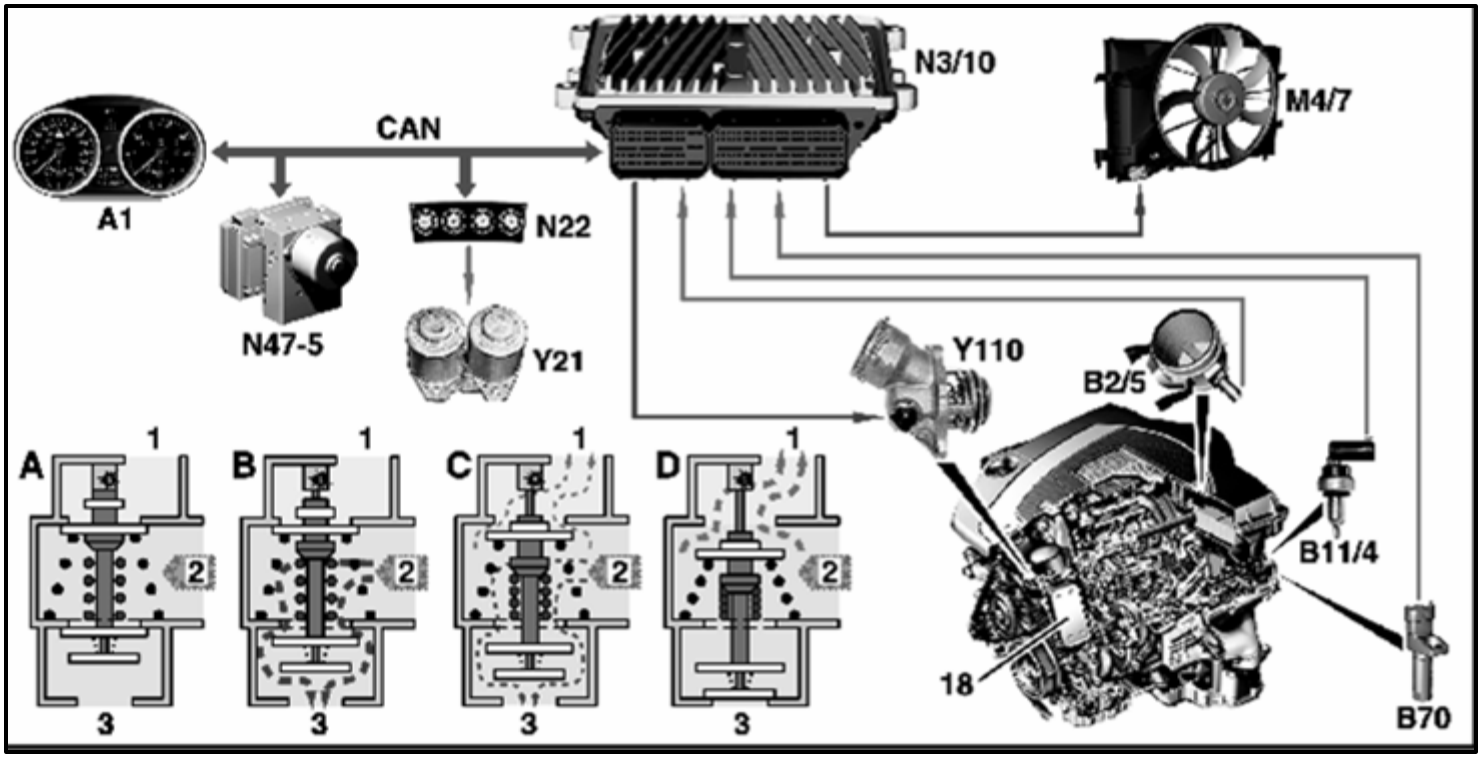

1 – To radiator
2 – From engine
3 – To engine

A – Stationary coolant (cold start)
B – Circuit for engine and heat exchanger
C – Active after 208°F (98°C), after start or ambient temp. above 82°F (28°C)
D – Position for max radiator operation

Temperature Management

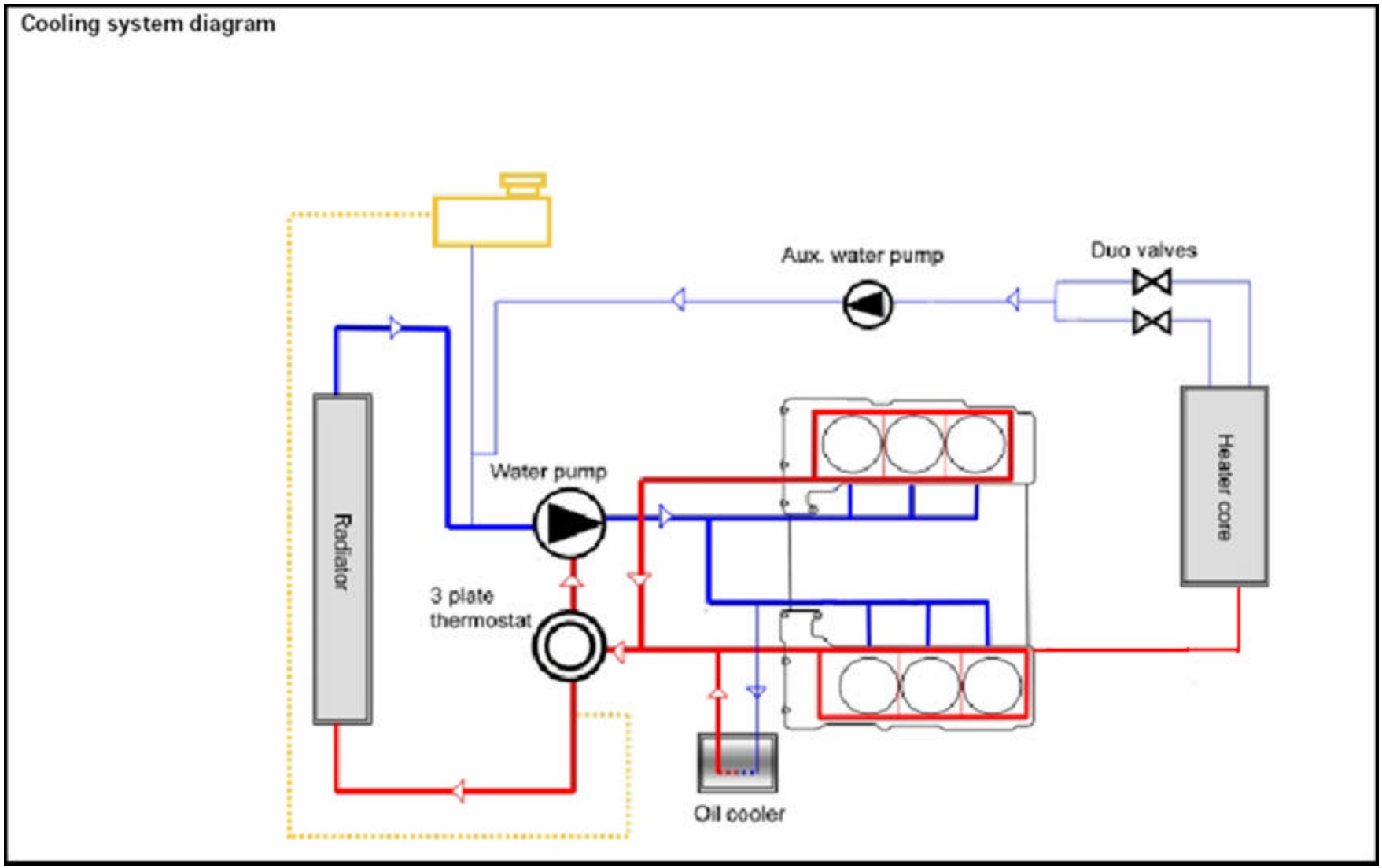

Fuel tank

Fuel pump control

Fuel Tank

- Magnesium cover helps protect tank
- Two layer steel tank with 18.4 gallon capacity
- In tank fuel supply system operates with 3.8 bar pressure
- Fuel filter with pressure regulator
- Returnless fuel system

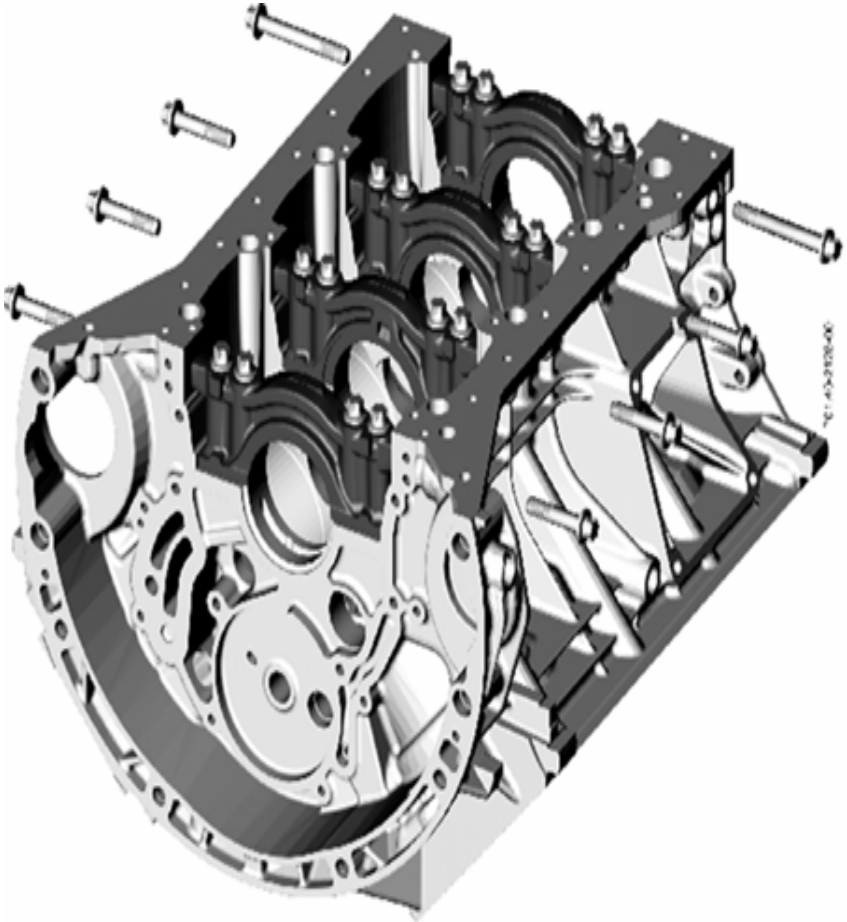

Fuel Networking

A Electrical line
B Fuel pipe
C Purge line

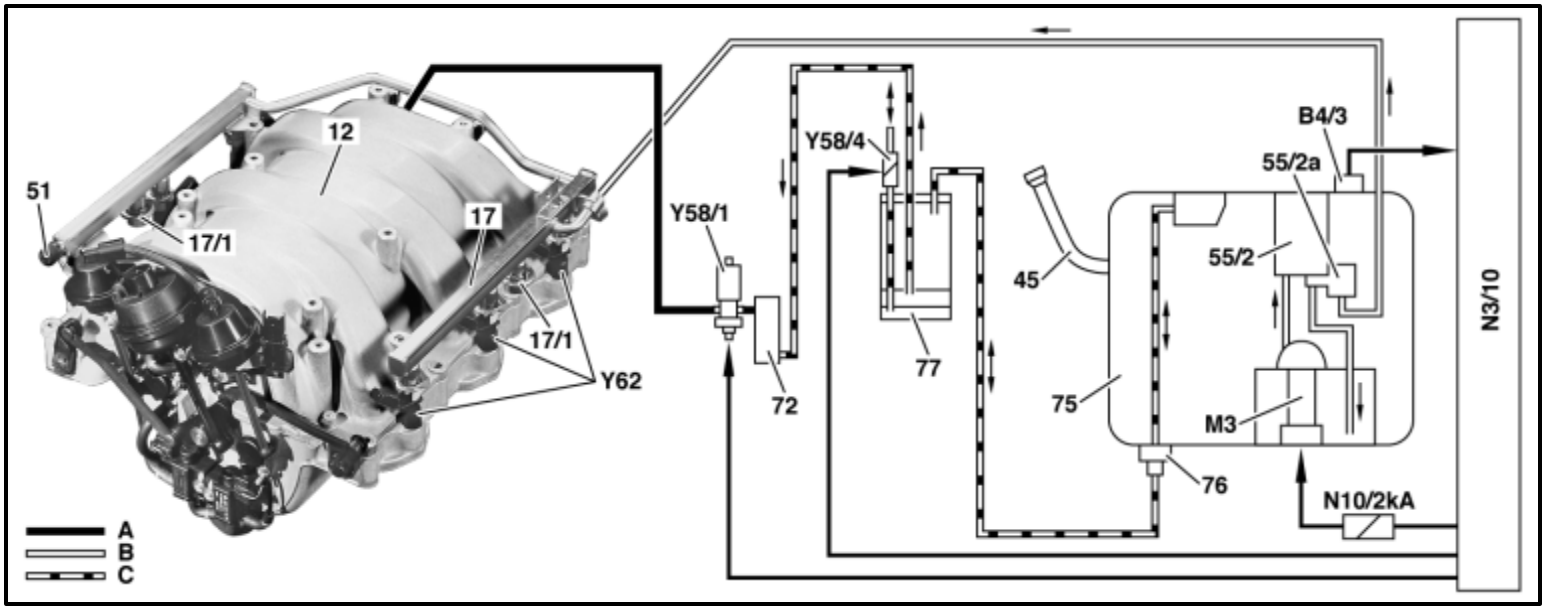

12 Intake manifold
17 Fuel rail
17/1 Fuel pressure reservoir
45 Fuel filler neck, with ORVR
51 Pressure gauge connection
55/2 Fuel filter
55/2a Fuel pressure regulator 3.8 bar

75 Fuel tank
76 Vent valve, except USA
77 Activated charcoal canister
B4/3 Fuel tank pressure sensor
M3 Fuel pump assembly (with integral fuel pump (FP))

N10/2kA Fuel pump relay
N3/10 ME-SFI control unit
Y58/1 Purge control valve
Y58/4 Activated charcoal filter shutoff valve
Y62 Fuel injection valves

Fuel Pump Control

- Fuel pump controlled via fuel pump relay (N10/2kA)
- Fuel pump Relay located in rear SAM (N10/2)
- Fuel pump relay energized via ME
- Fuel pump runs ~ 1 second after ignition on

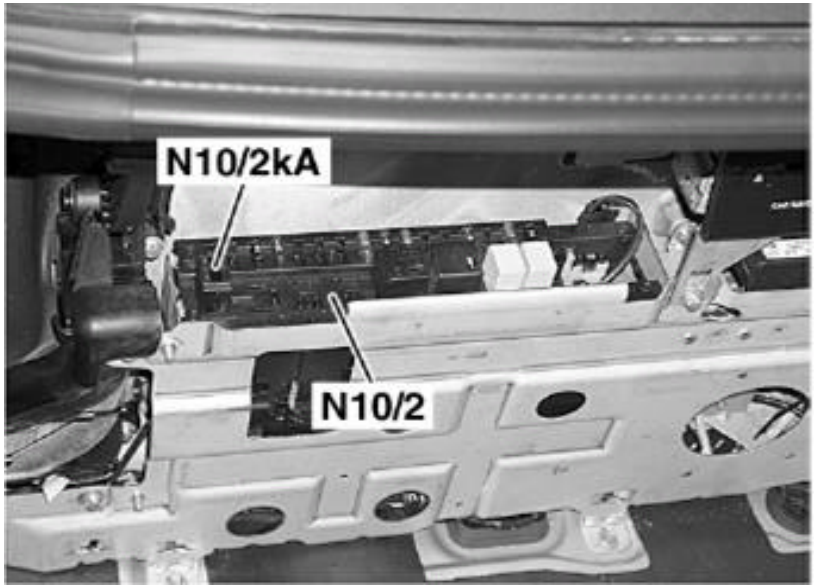

N10/2 – Rear SAM
N10/2kA – Fuel pump relay

Fuel Supply Circuit In Tank

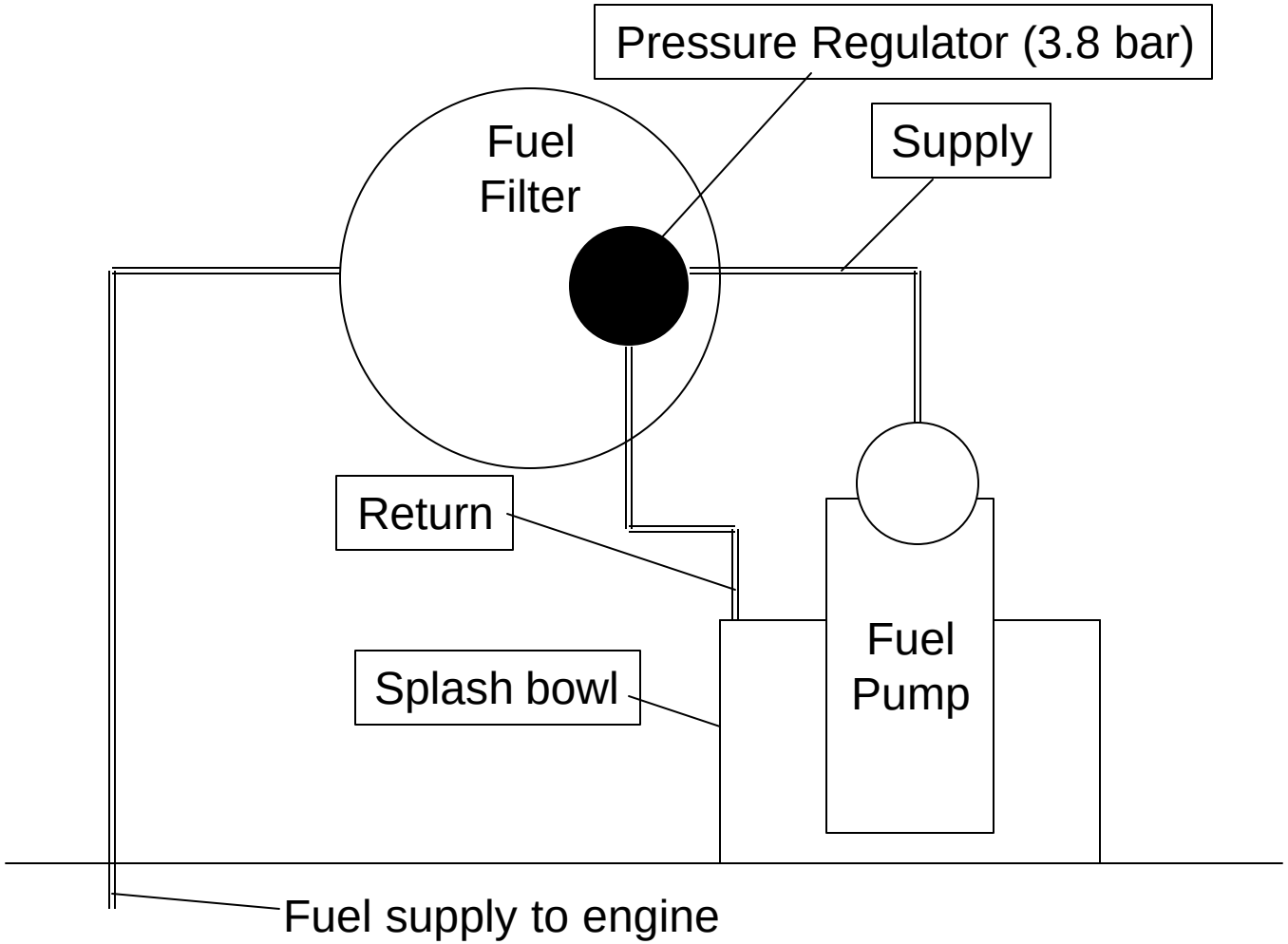

Access Point To Fuel Filter and Pump

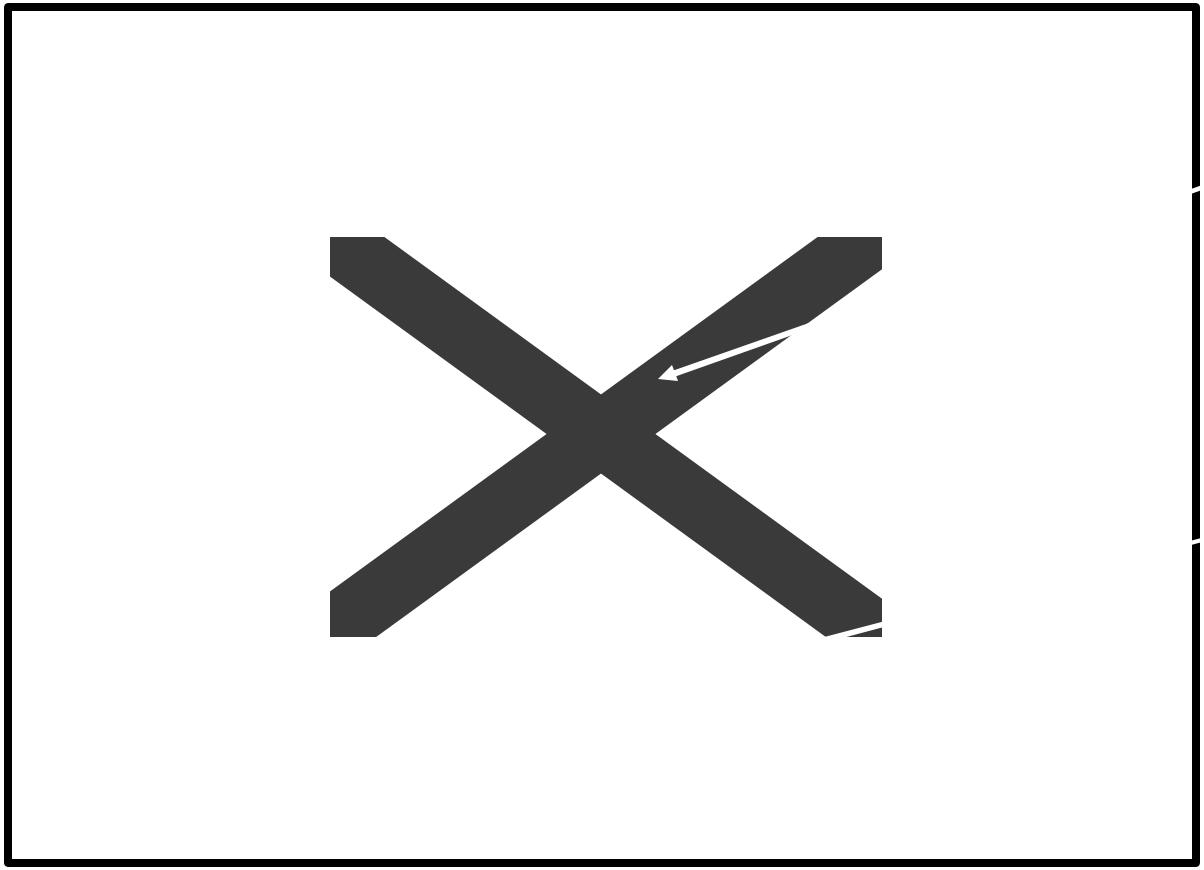

Tank
Pressure
Sensor

Connector
For pump
And level
sensor

Fuel Pressure Regulator

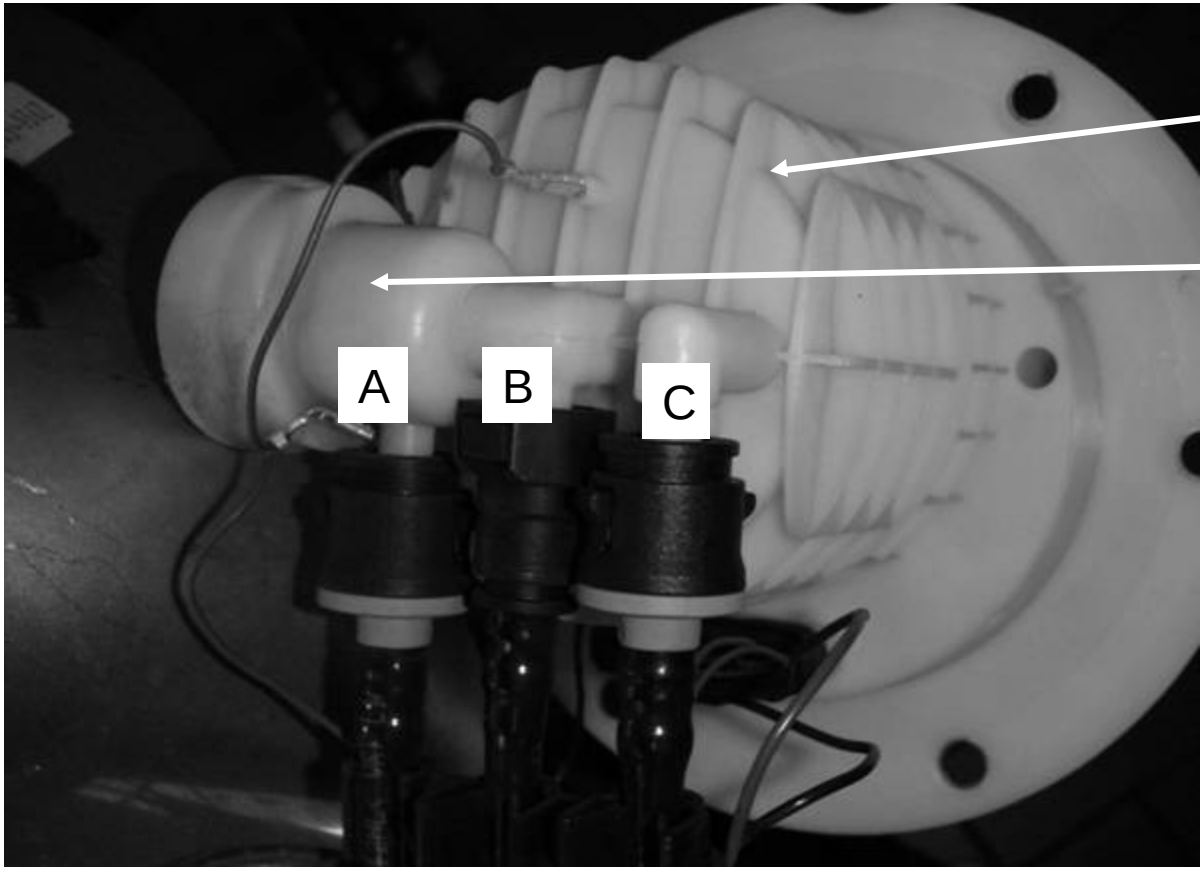

Filter

Pressure regulator

A-from pump
B-return to splash bowl
C-filtered fuel to engine

Fuel Level Sensor

Splash Bowl

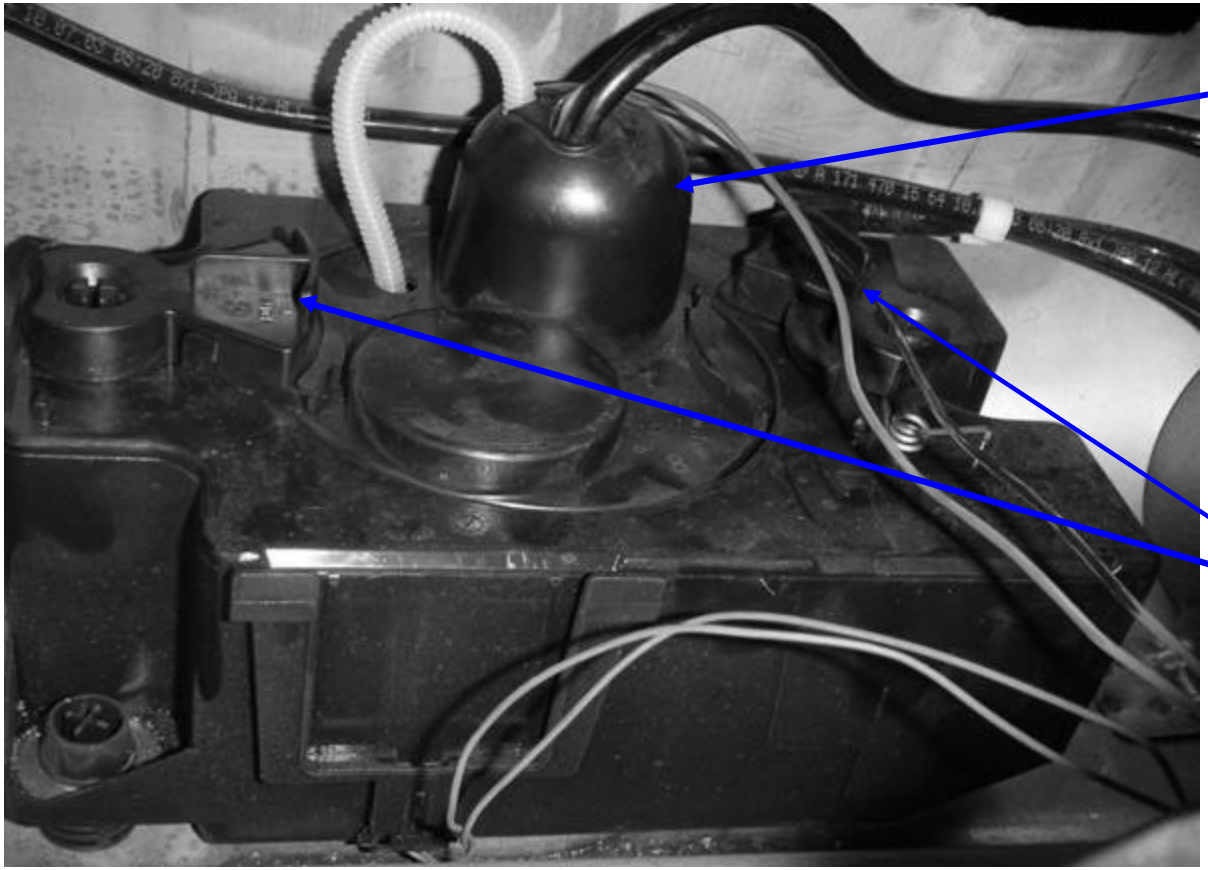

pump

Swivel
2 retainers
to remove
pump

Fuel Pump

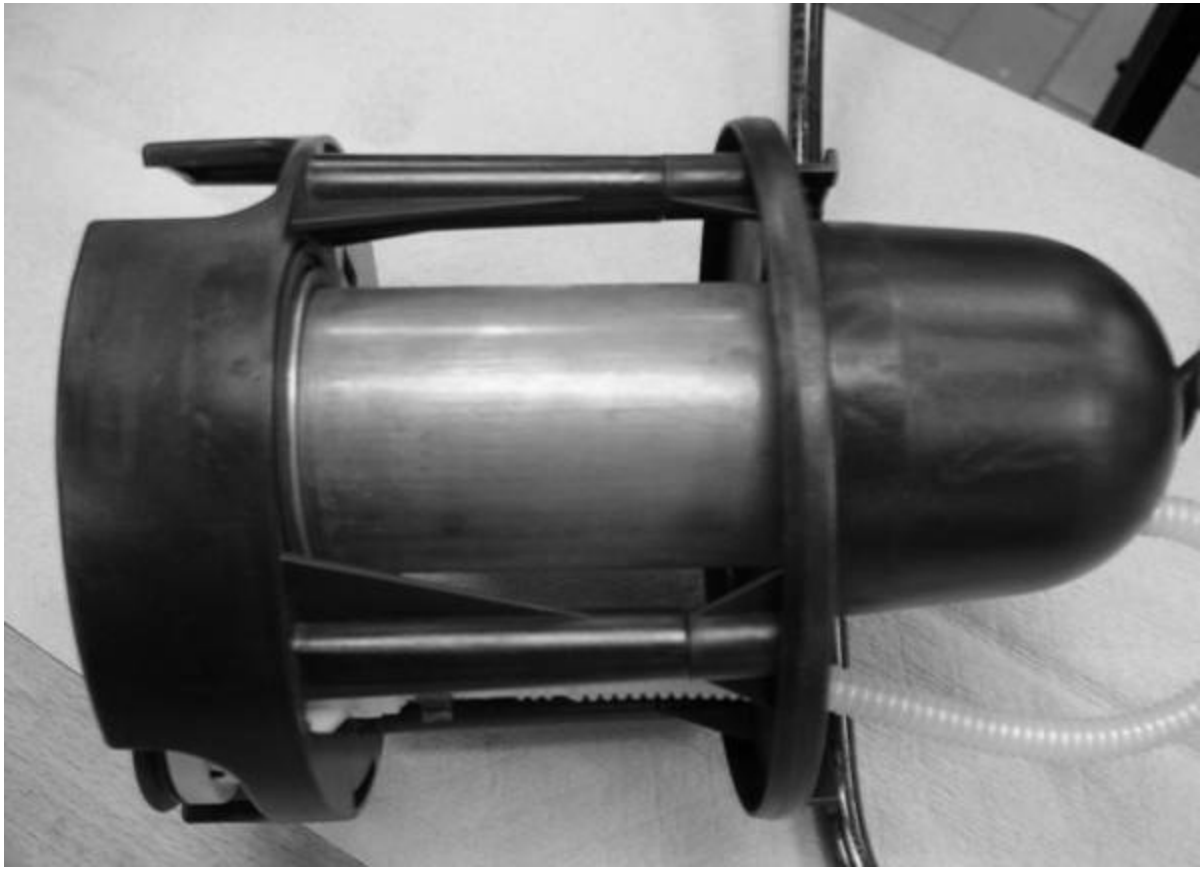

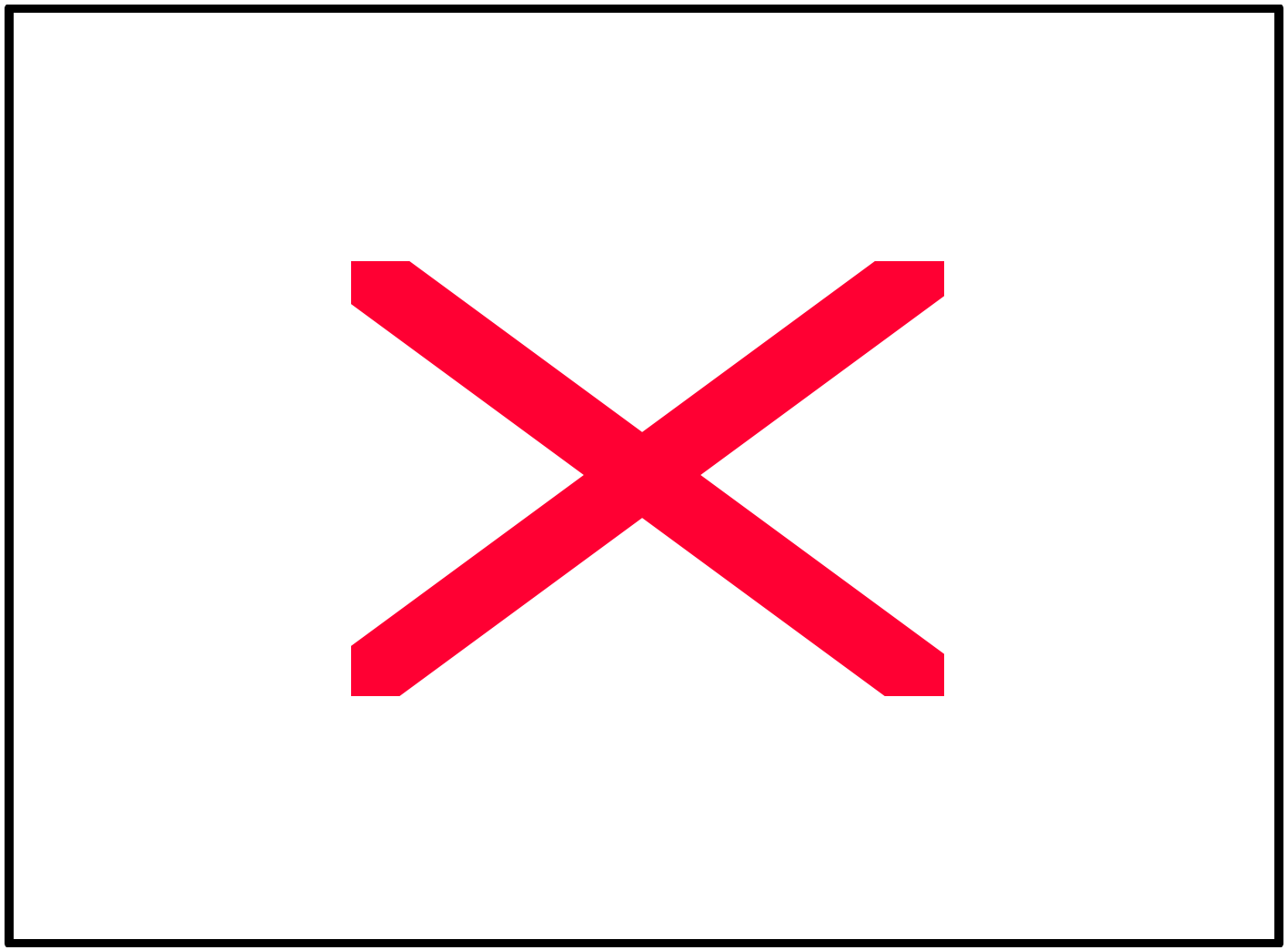

N3/10 – ME 9.7
A1 – Instrument cluster
N10/2 – Rear SAM

B4 – Fuel level sensor
75 – Fuel tank

Speed Sensitive Power Steering

Speed Sensitive Power Steering

- Gives the customer firmer feel in steering at higher speeds and more assist for parking maneuvers at slower speeds
- ME 9.7 now controls functions of the Speed Sensitive Power Steering system
- The valve port is adjusted for steering support required for the current driving condition and is dependent on the following input signals:
  - Engine speed
  - Vehicle speed (Via CAN)
  - Steering angle (Via CAN)
  - Steering angle speed (Via CAN)

Speed Sensitive Power Steering

- The pressure regulator valve controls the valve port and is rigidly connected to the power steering pump
- It is actuated according to a performance map with a duty cycle of 10 to 90% and regulates the amount delivered to the power steering pump at between 2 and 9 liters/minute
- The pressure regulator valve is opened wide for ignition ON and during engine start
- In the case of faults on the input signals or on the pressure regulator valve, actuation is interrupted immediately and the maximum support is available from the power steering pump

Speed Sensitive Power Steering Networking

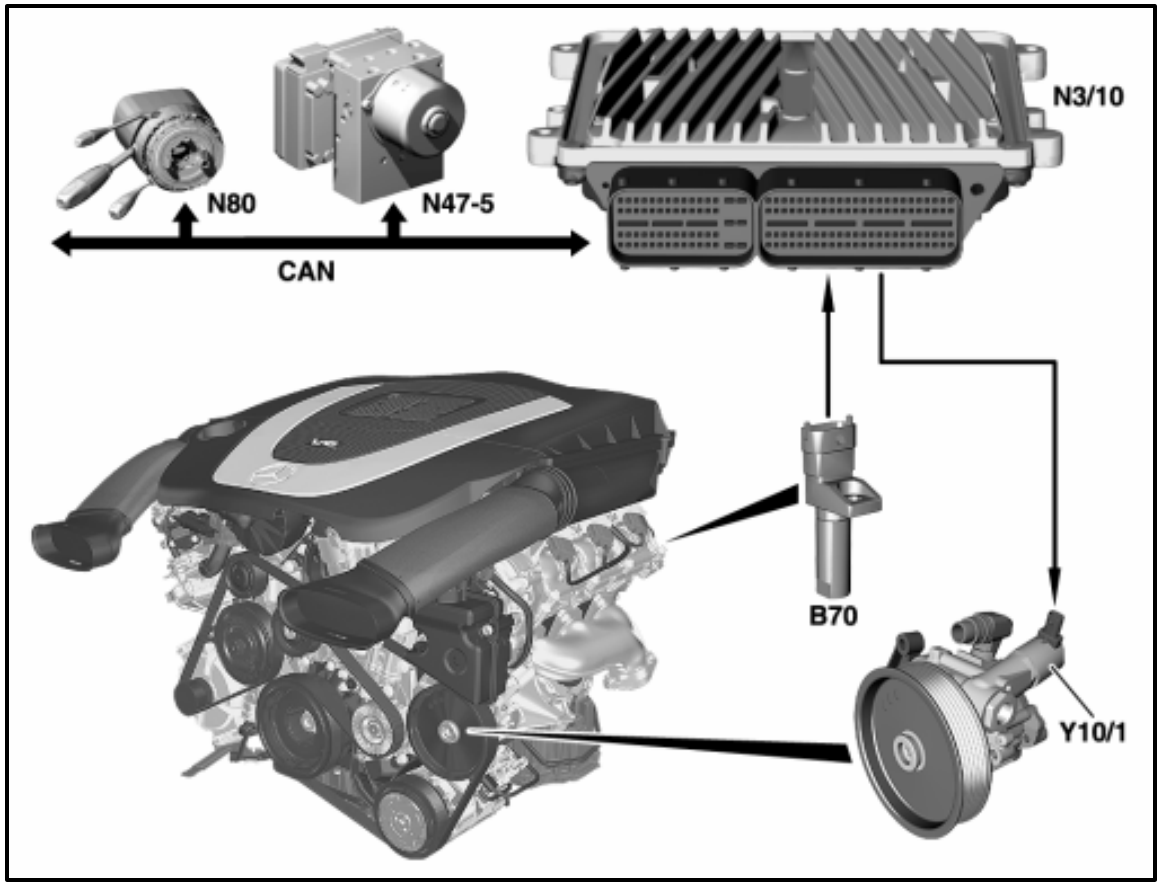

B70 Crankshaft Hall sensor
N3/10 ME-SFI control unit
N47-5 ESP and BAS control unit
N80 Steering column module
Y10/1 Power steering pump pressure regulator valve

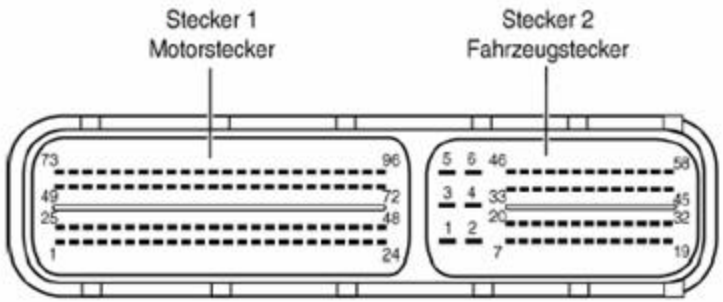

Connector 1 Motor connector (M) Connector 2 Vehicle connector (F)

Pin	Signal/Signal info
1	Camshaft timing adjuster intake, right bank
2	Not used
3	Injection valve end stage, cyl.6
4	Not used
5	Pressure control valve steering assist pump
6	Ignition signal 1 Ignition coil cyl.1
7	Ignition signal 3 Ignition coil cyl.3
8	Ignition signal 5 Ignition coil cyl.2
9	Not used
10	Camshaft sensor exhaust right bank
11	Lambda sensor before CAT right bank (nernst voltage)
12	Lambda sensor before CAT left bank (trim resistor)
13	Signal lambda sensor im CAT left bank
14	Lambda sensor before CAT right bank (virtual ground)
15	Sensor ground 1
16	Sensor ground 2
17	(Sensor ground)
18	Not used
19	Switch over solenoid valve (EUV) turbulance flap
20	Not used
21	Variable intake manifold valve
22	Injection valve end stage, cyl.4
23	Injection valve end stage, cyl.1
24	Camshaft sensor exhaust right bank
25	Heater lamba sensor in CAT left bank
26	Injection valve end stage, cyl.5
27	Heater lamba sensor in CAT right bank
28	Not used
29	Not used
30	Ignition signal 2 Ignition coil cyl.4
31	Ignition signal 4 Ignition coil cyl.6
32	Ignition signal 6 Ignition coil cyl.5
33	Not used
34	Camshaft sensor exhaust left bank
35	Lambda sensor before CAT left bank (Nernst voltage)
36	Lambda sensor before CAT left bank (pump voltage)
37	HFM – Signal secondary air pump (SULEV – not USA)
38	Lambda sensor before CAT left bank (virtual Ground)
39	Sensor ground throttle plate potentiometer
40	Sensor ground lambda sensor in CAT left bank
41	Signal lambda sensor in CAT right bank
42	5V Sensor power supply 1
43	5V Sensor power supply throttle plate potentiometer
44	5V Sensor power supply 2
45	LIN - interface
46	Not used
47	Injection valve end stage, Cyl.3
48	Camshaft timing adjuster intake left bank
49	Heater lambda sensor before CAT right bank
50	Not used
51	Injection valve end stage, Cyl.2
52	Not used
53	Secondary air valve
54	3-plate thermostat
55	Not used
56	Camshaft sensor intake left bank
57	Camshaft sensor intake right bank
58	Not used
59	Signal A knock sensor left bank
60	Signal A knock sensor right bank
61	Lambda sensor before CAT right bank (trim resistor)
62	Not used

63	Position sensor turbulance flap left bank
64	Not used
65	Not used
66	Signal coolant temperature sensor
67	Not used
68	Not used
69	Signal hot film MAF
70	Not used
71	Heater shut off valve
72	Not used
73	Heater lambda sensor before CAT left bank
74	Motor (plus) throttle plate motor
75	Motor (minus) throttle plate motor
76	Not used
77	Not used
78	Not used
79	Not used
80	Ground crankshaft sensor
81	Signal crankshaft sensor
82	Not used
83	Signal B knock sensor left bank
84	Signal B knock sensor right bank
85	Lambda sensor before CAT right bank (pump current)
86	Signal manifold absolute pressure sensor
87	Oil pressure switch
88	Signal throttle plate potentiometer 1
89	Position sensor turbulance flap left bank
90	Not used
91	Not used
92	Not used
93	Reference signal (temperature) hot film MAF
94	Oil level switch
95	Camshaft timing adjuster exhaust left bank
96	Not used

Questions?